ADVANCE by signify

LED Modules

Fortimo InstantFit 22in 40L 640mA LV1

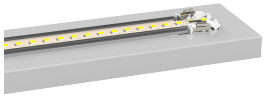

Fortimo InstantFit LV1 is the first truly field replaceable module. This revolutionary breakthrough ensures that an LED troffer containing it will never have to be scrapped on account of the light source.
Replace simply by snapping into connector on the fixture. This enables late stage fixture configuration at factory, RDC, distributor, or even in the field.
Fortimo InstantFit LV1 comes with a range of performance levels both in 2ft and 4ft options; and the rigid aluminum frame provides excellent thermal performance and ease of assembly.

Key features and benefits

- High energy efficacy of up to 170lm/W at nominal conditions
- Available in three performance levels for both 2ft and 4ft lengths
- Rigid module for easy assembly
- Excellent thermal performance
- 3 SDCM color consistency
- Field replaceable modules according to Zhaga Book 21 enabling late stage configuration and peace of mind
- Quick assembly without screws
- High energy efficacy and long lifetime
- 5-year limited system warranty with Advance Xitanium LED drivers

Ordering data

Commercial product name	12NC	Box quantity
FO IF 22in 40L 830 640mA LV1	9290 016 74606	200
FO IF 22in 40L 835 640mA LV1	9290 016 74706	200
FO IF 22in 40L 840 640mA LV1	9290 016 74806	200
FO IF 22in 40L 850 640mA LV1	9290 016 74906	200

Drive currents

Parameter	Nominal*	Life**	Max***	Unit
Fortimo InstantFit 22in 40L 640mA LV1	582	640	640	mA

Module temperatures

Parameter	Nominal*	Life**	Max***	Unit
T_c (case temperature at T_c point)	45	80	90	°C

* Nominal value at which typical performance is specified

** Value at which life time is specified

*** Maximum value for safe operation, do not operate above this value

Optical characteristics - table per color (CCT)

FO IF 22in 40L 830 640mA LV1

Parameter	Min	Typ	Max	Unit
Luminous flux	3500	3723	3946	lm
Module efficacy	148	157		lm/W
Correlated color temperature (CCT)		3000		K
Color coordinates (CIEx, CIEy)		(0.433, 0.401)		-
Color consistency			3	SDCM
CRI	80			
Photometric code		830/359		
Radiation angle		120		deg

Measurement precision ± 5% for the flux data and ± 6% for the efficacy data. Measurement precision for color coordinates ± 0.005. Measurement precision for CRI ± 1.5

Operation point	830	lm	lm/W
50% I-nom 291mA	Tc 25 °C	1986	176
	Tc-nom 45 °C	1940	173
	Tc-max 90 °C	1817	165
I-nom 582mA	Tc 25 °C	3824	160
	Tc-nom 45 °C	3723	157
	Tc-max 90 °C	3496	150
I-max 640mA	Tc 25 °C	4176	158
	Tc-nom 45 °C	4078	155
	Tc-max 90 °C	3817	147

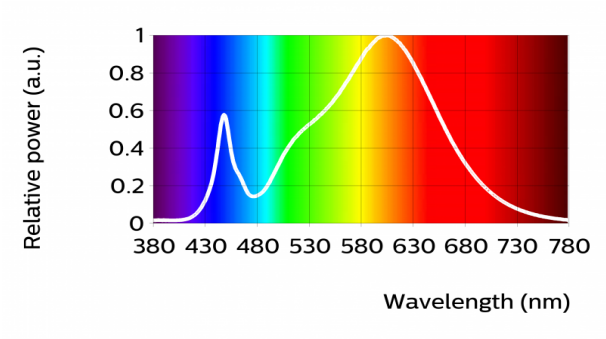

FO IF 22in 40L 835 640mA LV1

Parameter	Min	Typ	Max	Unit
Luminous flux	3715	3952	4189	lm
Module efficacy	157	167		lm/W
Correlated color temperature (CCT)		3500		K
Color coordinates (CIEx, CIEy)		(0.406, 0.390)		-
Color consistency			3	SDCM
CRI	80			
Photometric code		835/359		
Radiation angle		120		deg

Measurement precision ± 5% for the flux data and ± 6% for the efficacy data. Measurement precision for color coordinates ± 0.005. Measurement precision for CRI ± 1.5

Operation point	835	lm	lm/W
50% I-nom 291mA	Tc 25 °C	2108	186
	Tc-nom 45 °C	2059	183
	Tc-max 90 °C	1929	175
I-nom 582mA	Tc 25 °C	4060	170
	Tc-nom 45 °C	3952	167
	Tc-max 90 °C	3711	159
I-max 640mA	Tc 25 °C	4433	167
	Tc-nom 45 °C	4329	165
	Tc-max 90 °C	4052	157

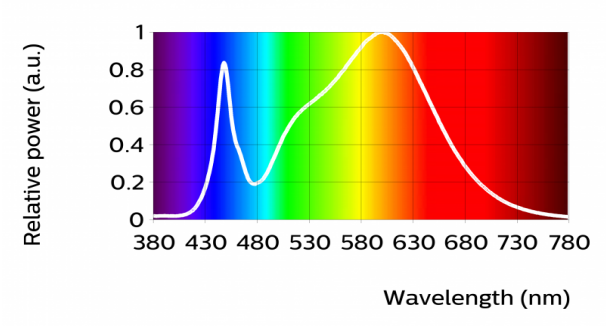

FO IF 22in 40L 840 640mA LV1

Parameter	Min	Typ	Max	Unit
Luminous flux	3776	4017	4258	lm
Module efficacy	159	170		lm/W
Correlated color temperature (CCT)		4000		K
Color coordinates (CIEx, CIEy)		(0.381, 0.378)		-
Color consistency			3	SDCM
CRI	80			
Photometric code		840/359		
Radiation angle		120		deg

Measurement precision ± 5% for the flux data and ± 6% for the efficacy data. Measurement precision for color coordinates ± 0.005. Measurement precision for CRI ± 1.5

Operation point	840	lm	lm/W
80% I-nom 466mA	Tc 25 °C	2143	189
	Tc-nom 45 °C	2094	187
	Tc-max 80 °C	1961	178
I-nom 582mA	Tc 25 °C	4127	173
	Tc-nom 45 °C	4017	170
	Tc-max 80 °C	3773	162
I-max 640mA	Tc 25 °C	4506	170
	Tc-nom 45 °C	4401	167
	Tc-max 80 °C	4119	159

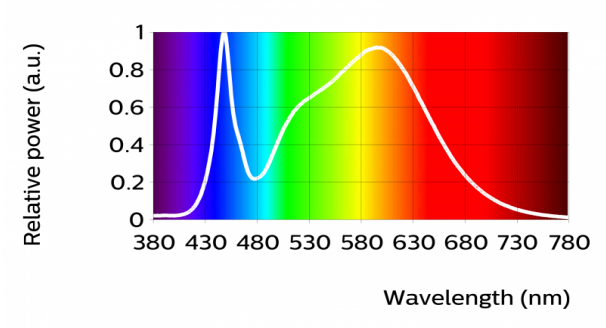

FO IF 22in 40L 850 640mA LV1

Parameter	Min	Typ	Max	Unit
Luminous flux	3776	4017	4258	lm
Module efficacy	159	170		lm/W
Correlated color temperature (CCT)		5000		K
Color coordinates (CIEx, CIEy)		(0.341, 0.350)		-
Color consistency			3	SDCM
CRI	80			
Photometric code		850/359		
Radiation angle		120		deg

Measurement precision ± 5% for the flux data and ± 6% for the efficacy data. Measurement precision for color coordinates ± 0.005. Measurement precision for CRI ± 1.5

Operation point	850	lm	lm/W
80% I-nom 466mA	Tc 25 °C	2143	189
	Tc-nom 45 °C	2094	187
	Tc-max 80 °C	1961	178
I-nom 582mA	Tc 25 °C	4127	173
	Tc-nom 45 °C	4017	170
	Tc-max 80 °C	3773	162
I-max 640mA	Tc 25 °C	4506	170
	Tc-nom 45 °C	4401	167
	Tc-max 80 °C	4119	159

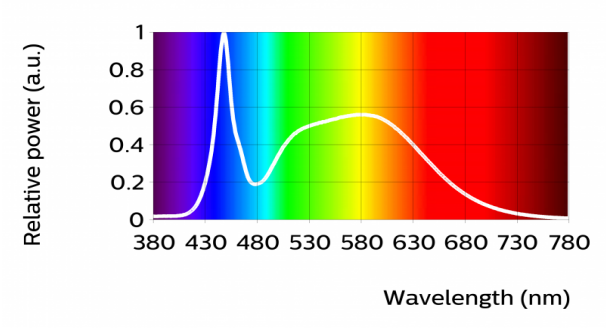

Electrical characteristics

Parameter	Min	Typ	Max	Unit
Forward voltage	39.5	40.7	41.9	V
Power consumption	23.0	23.7	24.4	W = kWh/1000h
Number of modules in series per chain			1	

Measurement precision for Vf +/- 3%. Measurement precision for power +/- 3.3%

Tuning information

Flux and efficacy versus current (at Tc nominal)

I [mA]	Flux [%]	Efficacy [%]
640	109	98
611	105	99
582	100	100
466	81	104
291	52	110

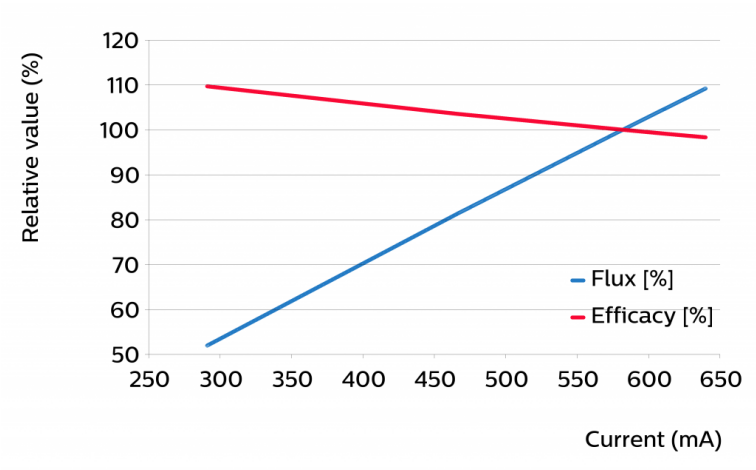

Flux and efficacy versus temperature at Tc (at I nominal)

Tc [°C]	Flux [%]	Efficacy [%]
80	95	96
45	100	100
25	102	102
0	105	103

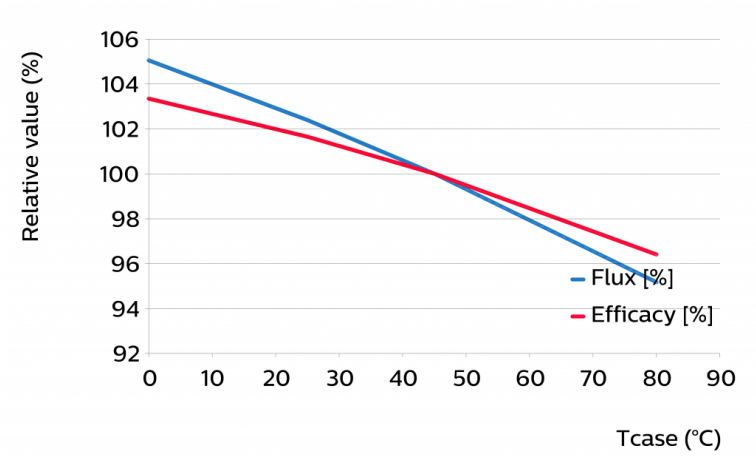

Lumen maintenance

Operation point	Lumen maintenance	L70			L80			L90		
	x 1000 hours	B50	B20	B10	B50	B20	B10	B50	B20	B10
80% I nom 466 mA	Tc 25°C	>100	>100	>100	>100	>100	>100	62	61	61
	Tc nom 45°C	>100	>100	>100	>100	>100	87	49	48	48
	Tc life 80°C	>100	>100	>100	74	72	71	34	34	33
I nom 582 mA	Tc 25°C	>100	>100	>100	>100	>100	>100	60	58	58
	Tc nom 45°C	>100	>100	>100	>100	99	98	47	46	46
	Tc life 80°C	>100	>100	>100	70	69	68	33	32	32
I life 640 mA	Tc 25°C	>100	>100	>100	>100	>100	>100	58	57	57
	Tc nom 45°C	>100	>100	>100	99	97	96	46	45	45
	Tc life 80°C	>100	>100	>100	69	67	66	32	31	31

Performance Window

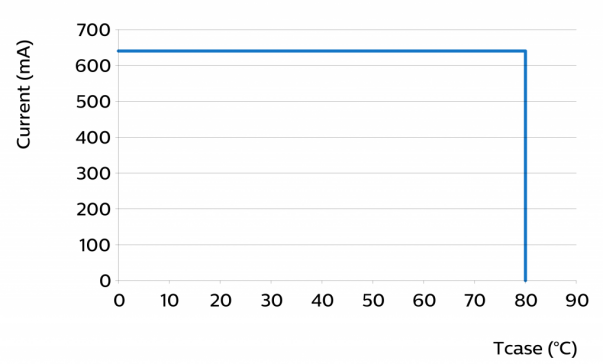

Wiring

Specification item	Value	Unit	Condition
Input wire cross-section	0.75...0.75	mm²	BJB 47.303, solid wire, tinned wire
	18...18	AWG	BJB 47.303, solid wire, tinned wire
Input wire strip length	6...8	mm	

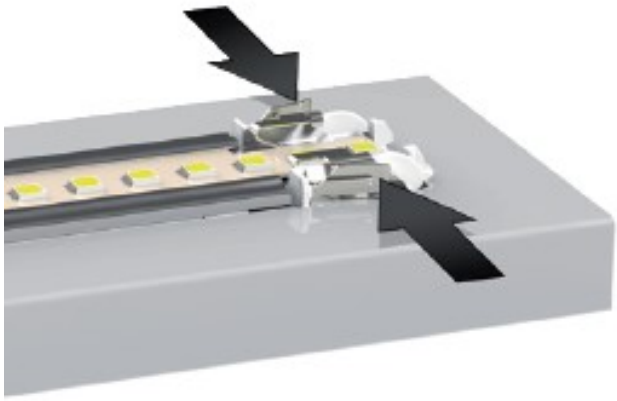

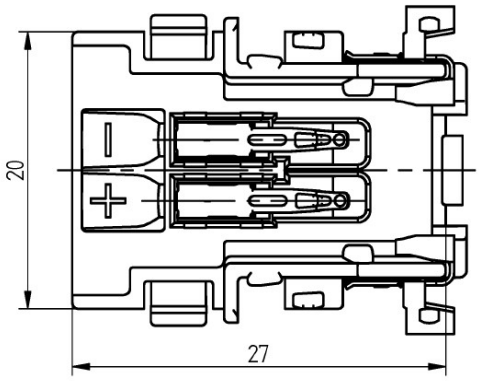

Mechanical characteristics

Parameter	Min	Typ	Max	Unit
Length	537.5	538.5	539.5	mm
Width	19.8	20	20.2	mm
Height Total	2	2.3	2.6	mm
Product mass		40		gram

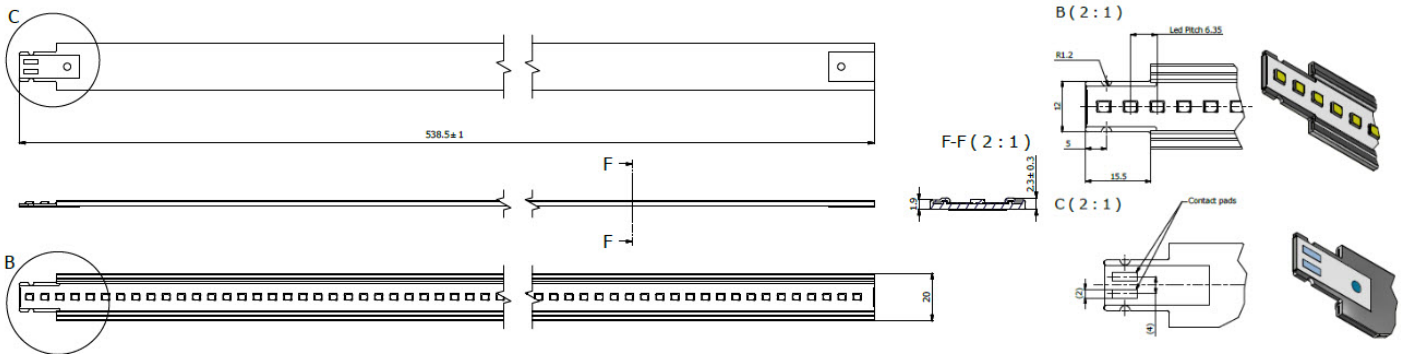

Absolute ratings

Parameter	Min	Max	Unit
Case temperature (Tc-max)		90	°C
ESD (direct contact)		8	kV
Working voltage		60	V_{dc}

Application information

Certificates and Standards
CE
ENEC
UL

Environmental
RoHS/REACH

Application	
Dimming	Yes

© 2019 Signify Holding. All rights reserved. This document may be subject to change. No representation or warranty as to the accuracy or completeness of the information included herein is given and any liability for any action in reliance thereon is disclaimed.
All trademarks are owned by Signify Holding or their respective owners.

Signify North America Corporation
10275 W. Higgins Road
Rosemont, IL 60018
Tel: 800-322-2086 Fax: 888-423-1882
Customer Service: 800-372-3331
OEM Support: 866-915-5886

Signify Canada Ltd.
281 Hillmount Road,
Markham, ONs Canada L6C 2S3
Telephone 800-668-9008

www.signify.com/advance